📄 1. Project Title

Autonomous Indoor Mapping & Delivery Robot using SLAM and Raspberry Pi

---

🎯 2. Objective

The objective of this project is to design and develop an **autonomous mobile robot** capable of:

- 🗺 Creating real-time maps of unknown indoor environments
- 📍 Localizing itself within the environment
- 🚚 Navigating autonomously from one point to another
- 📦 Delivering small payloads efficiently

This project aims to replicate **real-world warehouse and hospital delivery robots** using cost-effective components.

🌍 3. Problem Statement

In environments like:

- 🏥 Hospitals
- 🏫 Campuses
- 🏢 Offices

Manual delivery of items is:

- Time-consuming
- Inefficient
- Labor-dependent

👉 This project solves it by:
Automating indoor delivery using intelligent robotics

💡 4. Proposed Solution

We propose a **SLAM-based autonomous robot** that:

- Uses LiDAR to scan surroundings
- Builds a 2D map in real time
- Plans optimal paths
- Avoids obstacles dynamically
- Delivers items to target locations

🧠 5. System Architecture

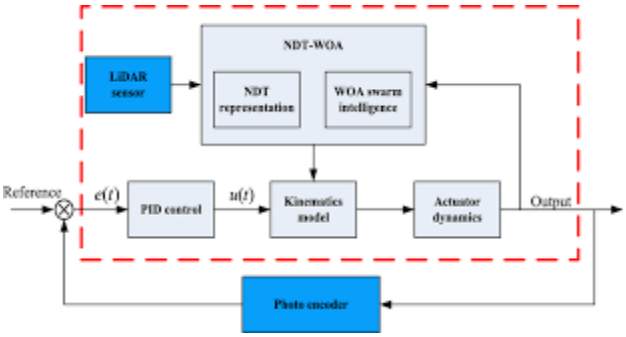

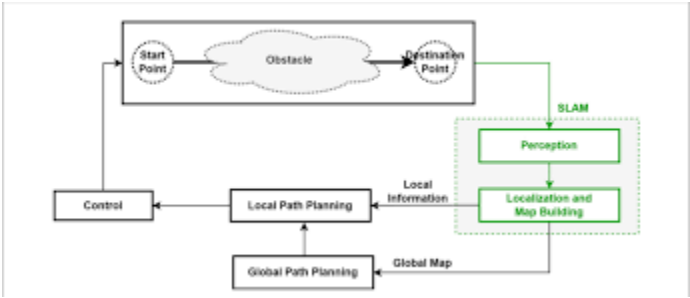

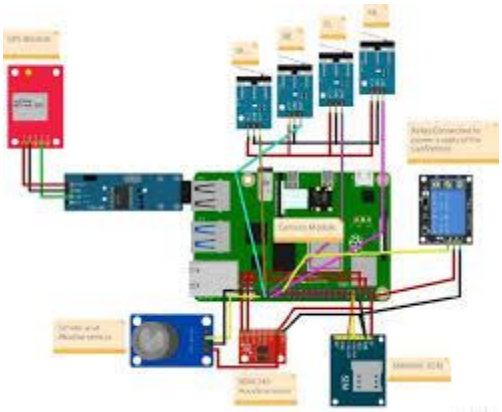

🔁 **Workflow:**

1. LiDAR scans environment
2. SLAM algorithm builds map
3. Localization identifies robot position
4. Path planning calculates route
5. Motor control executes movement

🧰 6. Components Required

🧠 Core Components

- Raspberry Pi 4 (4GB)
- LiDAR Sensor (RPLIDAR A1/A2)
- Motor Driver (L298N / BTS7960)
- 4WD Robot Chassis
- BO Motors + Wheels

🔋 Power System

- 18650 Li-ion Batteries
- Battery Holder + BMS
- Voltage Regulator (5V for Pi)

📡 Sensors

- Ultrasonic Sensors (Obstacle backup)
- IMU Sensor (MPU6050)
- Camera Module (optional)

🔌 Others

- Jumper wires
- Breadboard
- SD Card (32GB)
- Cooling fan

⚙️ 8. Technologies Used

- 🐍 Python
- 🤖 ROS2 (Robot Operating System)
- 🗺️ SLAM Toolbox / Gmapping
- 👁️ OpenCV (optional vision)
- 📡 MQTT / Socket Communication

🔌 9. Circuit Diagram (Conceptual)

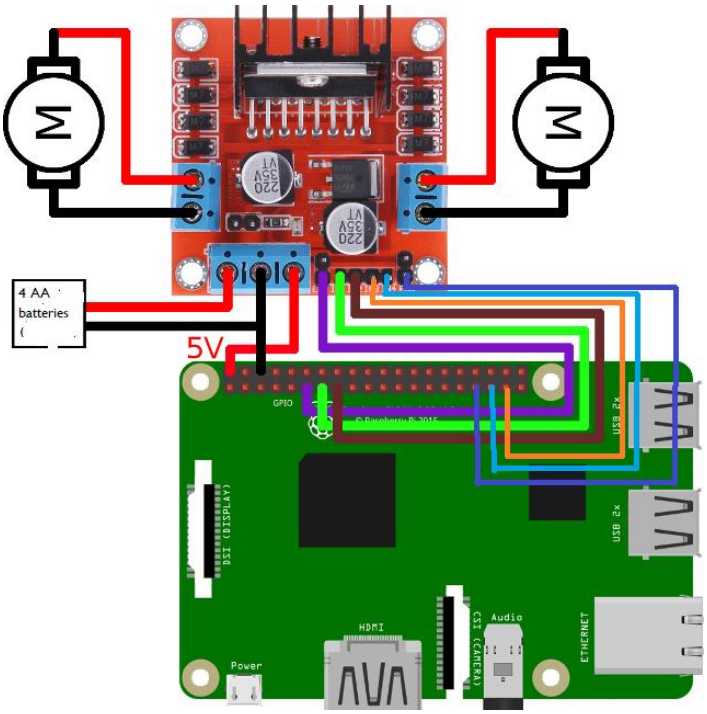

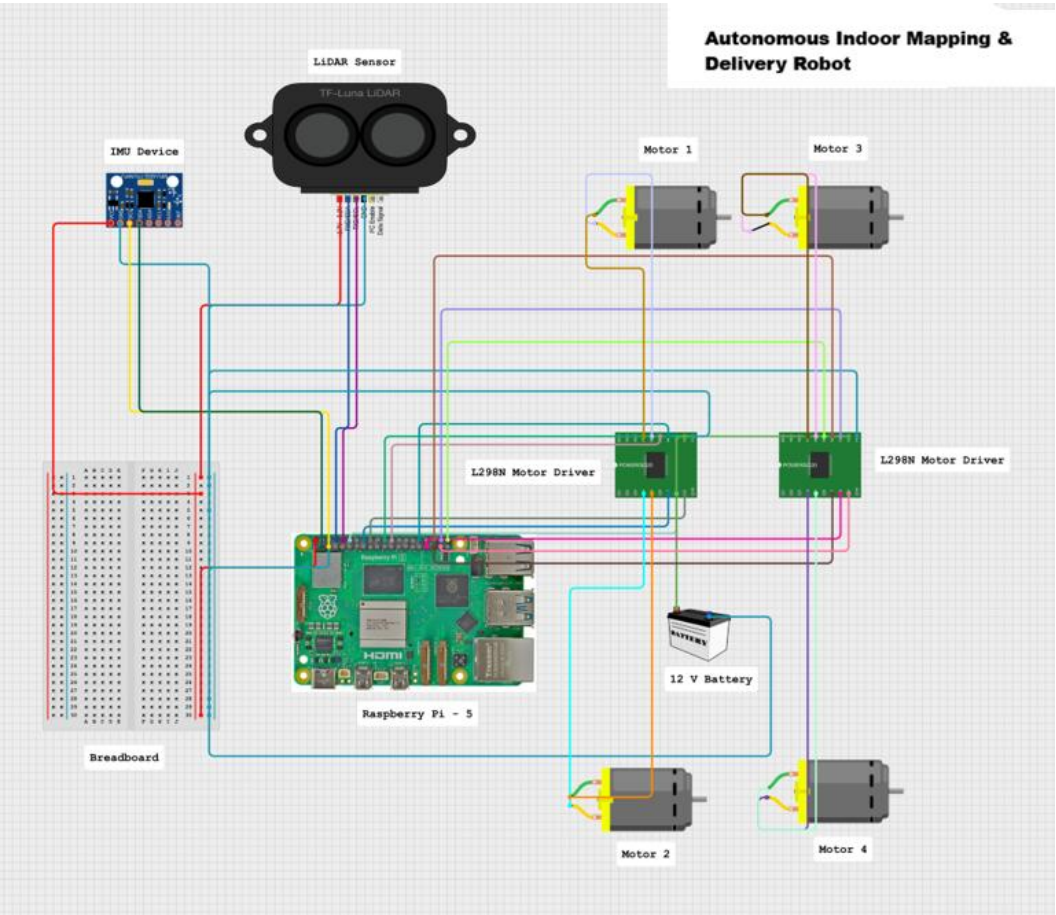

4

🔗 **Connections:**

- Motors → Motor Driver → Raspberry Pi GPIO
- LiDAR → USB / Serial to Raspberry Pi
- Ultrasonic → GPIO pins
- Battery → Motor driver + Voltage regulator → Pi

💻 10. Software & Code Overview

🧠 SLAM Setup (ROS2)

```
# Install ROS2
sudo apt update
```

```
sudo apt install ros-humble-desktop

# Install SLAM toolbox
sudo apt install ros-humble-slam-toolbox

# Launch SLAM
ros2 launch slam_toolbox online_async_launch.py
```

📡 LiDAR Driver

```
ros2 launch rplidar_ros rplidar.launch.py
```

🗺 Visualization (RViz)

```
ros2 run rviz2 rviz2
```

🚗 Motor Control (Python Example)

```
import RPi.GPIO as GPIO
import time

GPIO.setmode(GPIO.BCM)

IN1, IN2 = 17, 18
GPIO.setup(IN1, GPIO.OUT)
GPIO.setup(IN2, GPIO.OUT)

def forward():
    GPIO.output(IN1, True)
    GPIO.output(IN2, False)

def stop():
    GPIO.output(IN1, False)
    GPIO.output(IN2, False)

forward()
```

```
time.sleep(2)
stop()
```

🧠 11. Key Features

- 🗺️ Real-time mapping using SLAM
- 🚗 Autonomous navigation
- 🚧 Obstacle avoidance
- 📦 Delivery mechanism
- 📡 Remote monitoring

🏆 12. Use Cases

- 🏥 Hospital delivery robot
- 🏫 Campus logistics
- 🏢 Office automation
- 📦 Warehouse transport

📊 13. Innovation & Uniqueness

- Combines **SLAM + Delivery system**
- Low-cost alternative to industrial robots
- Modular design for scalability
- Real-world problem solving

🔥 14. Future Enhancements

- Face recognition for secure delivery 🔐
- Mobile app control 📱

- Multi-robot coordination 🤖🤖
- Voice assistant integration 🎤
- AI-based path optimization

🎬 15. Simulation Plan (For Submission)

- Use Gazebo + RViz
- Show:
    - Mapping
    - Navigation
    - Path planning

🚀 16. Conclusion

This project demonstrates a **complete autonomous robotic system** integrating:

- Perception (LiDAR)
- Intelligence (SLAM)
- Action (motor control)

It provides a **scalable and practical solution** for indoor automation and smart logistics.